Specification

Component	Specification	
Eyepiece	Large field of view 10X/22, adjustable diopter	
Head	Hinged trinocular observation tube, high-eyepoint	
Epi-light source	Halogen	12V100W halogen light box
	LED light source (optional)	Broad-spectrum high-power LED light source MG-30
		Broad-spectrum high-power LED light source MG-100
Transmitted light	Brightfield light	Warm white LED illuminator, Abbe condenser, NA1.1
Metallographic objectives	Semi-apochromatic bright field PlanFluor EPI 5X/0.15	Light and dark fieldN-MPFN 5X/0.15
	Semi-apochromatic bright field PlanFluor EPI 10X/0.3	Light and dark fieldN-MPFN 10X/0.3
	Semi-apochromaticbright field PlanFluor EPI 20X/0.45	Light and dark fieldN-MPFN 20X/0.45
	Semi-apochromatic bright field PlanFluor EPI 50X/0.8	Light and dark fieldN-MPFN 50X/0.8
	Semi-apochromatic bright field PlanFluor EPI100X/0.9	Light and dark fieldN-MPFN 100X/0.9
Brightfield attachment	Bright field excitation block I, II (brightness attenuation)	
	Simple polarizing accessories (polarizer, analyzer)	
Darkfield attachment	Dark field excitation block	

Product Size

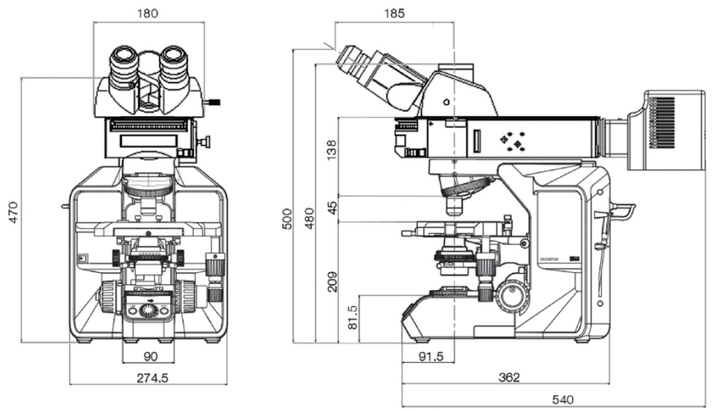

Guangzhou Micro-shot Technology Co.,Ltd
Add: 506, Building A, Vanke Cloud, No. 1933, Huaguan Road, Tianhe District, Guangzhou
Web: www.mshot.com 电话:020-38250606

Large view field, clear and uniform imaging

Semi-apochromatic metallographic objective

Ensure accurate color reproduction. For various application requirements, high resolution, long working distance bright/dark field plan objectives, etc. can be selected.

Kohler illumination

Kohler illumination is used for transmission and reflection to provide a bright and uniform field of view. Equipped with infinity optical system, high numerical aperture and long working distance objectives, perfect microscopic imaging.

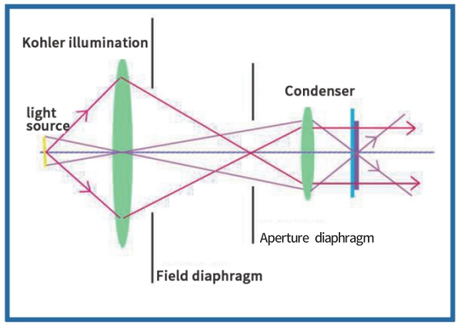

Diversified solutions for multiple applications

For different applications in industry and materials science, it can be modularized to form microscopes for various applications such as reflection, transmission and reflection, bright and dark field, polarized microscopes, etc.

Humanized design, simple and comfortable operation

Trinocular tube

Ilt adopts a trinocular triple light splitter tube to observe both visually and photographing at the same time. Adjustable eyepiece tilt angle to relieve muscle tension or discomfort caused by long working hours.

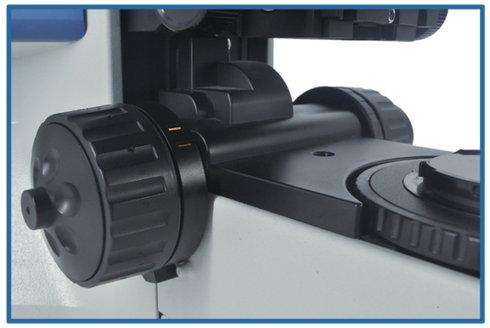

Coaxial coarse/fine focusing knob

In order to adapt to different operator habits, this knob can be operated by the user from the left or right. Limiting device can prevent damage to the objectives due to improper operation.

High-intensity LED lighting, long life

LED epi-illumination

The reflected light source adopts long-life LED (halogen lamp is optional), and the transmitted light source adopts warm color temperature and true color LED design, which can be matched with the Nosepiece to manage the light intensity.

Light intensity manager

By preset brightness, when switching between different objectives, the light intensity will keep the same brightness in the field of view, and there is no need to manually adjust the brightness of each objectives.